# *Neuronavigation, Stereotactic Neurosurgery*

Last updated: August 8, 2020



# PRINCIPLES

## DEFINITIONS

**"Stereotactic"** (Greek "stereos" - 3-dimensional; Latin "tactus" - to touch) – to touch the point in the space.
**Navigation** - targeting in space relative to known reference points.
**Image-guided neurosurgery (neuronavigation, "frameless stereotaxy")** - operative technique by which correlation (co-registration) between imaging studies and operative field is provided.

**Co-registration is the fundamental principle of stereotaxy**!

**STEREOTACTIC NEUROSURGERY** - use of coordinate system to provide accurate navigation to point / region in space (e.g. deep brain structures) without direct visualization.

## HISTORY

- 1908: **Horsely and Clarke** develop first apparatus for insertion of probes into the brain based upon Cartesian planes and bony landmarks; only used in primates:

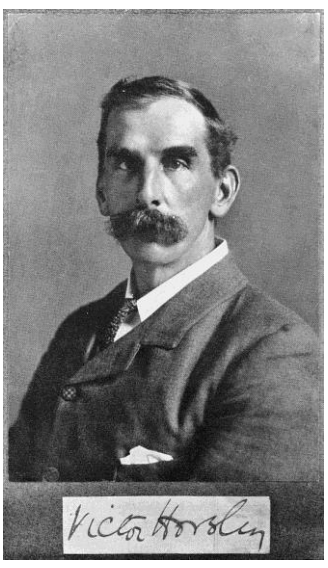

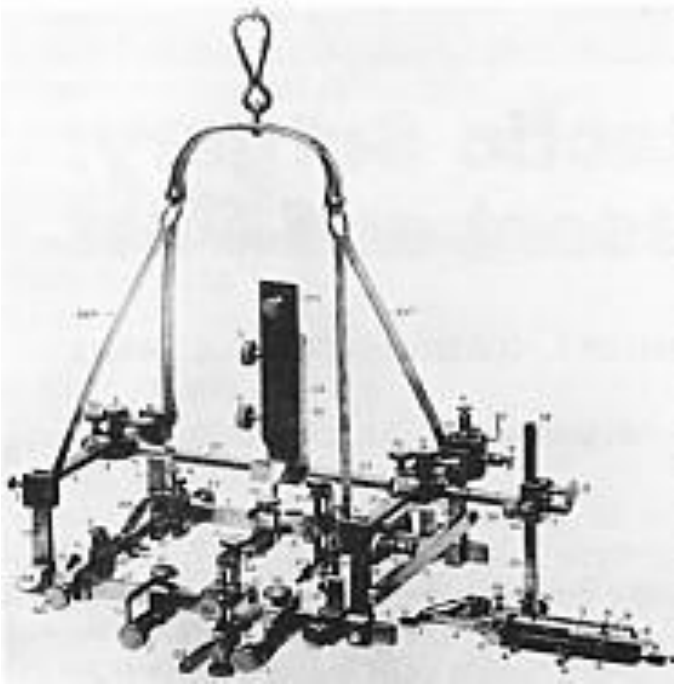

- 1947: **Spiegel and Wycis** report first human use of stereotactic device - to perform minimally-invasive psychosurgery but first use was movement disorders.


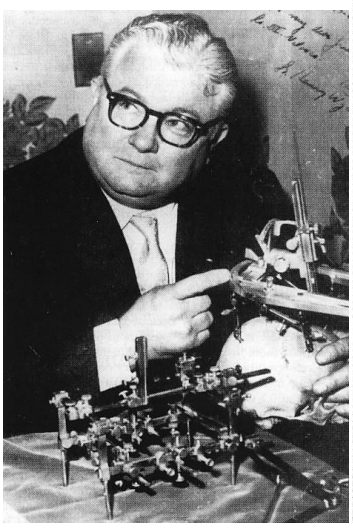
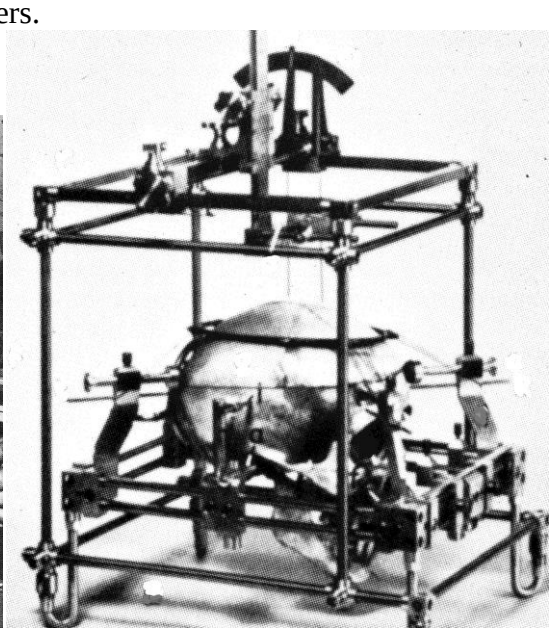

- 1948: **Leksell** develops first arc-centered frame.
- 1957: **Talairach** publishes first atlas based upon ventriculography and intracranial brain landmarks rather than bone landmarks.
- 1986: **Kelley** develops frame-based system for eye-tracking of operative microscope.
- 1986: **Roberts** develops frameless acoustic-based system for tracking operative microscope.
- 1991: **Bucholz** developed the first prototype for frameless sonic navigation of tracking tools and instruments in human cranial surgery
  - Soon after incorporated optical digitizers to reduce inaccuracies from sound echoes

# INDICATIONS

1. Tumor (biopsy, resection, radiosurgery)
2. Epilepsy (structural & physiologic data, resection)
3. Treatment of ***functional abnormalities*** (movement disorders, pain conditions) – by lesioning or stimulation. see p. Op360 >>
4. Stereotactic ***implantations*** of neural tissue, drug transplants, gene therapy.
5. Spine (instrumentation)
6. Ventricular catheterization (EVD / VP shunt placement)

## STEREOTACTIC PROCEDURES

### STRUCTURAL

- for structural lesions that can be detected on imaging study (tumors, abscesses, infections)

1. **Biopsy** (avoid vascular malformations and strokes!).
2. **Stereotactically guided endoscopic / open craniotomies** - removal / debulking of deep-seated lesions with minimal manipulation of overlying tissue.
3. **Stereotactically guided** intracerebral hematoma / abscess **evacuation** (esp. deep-seated and multiple).
4. **Interstitial / intracavitary irradiation** see p. Rx11 >>
5. **Radiosurgery** (application of stereotactic principles to convergent beam-ionizing irradiation therapy) – noninvasive!!! see p. Rx11 >>

### FUNCTIONAL

- changes function by altering aspect of abnormal functioning circuit (which may be upstream or downstream from pathologically affected part of circuit).

- indications: movement disorders, pain, epilepsy.
- target is usually anatomically defined and requires *precise localization by brain atlases*, in coordination with patient's own anatomy. see p. Op360 >>

Destructive methods:

a) radiofrequency heat lesions - easiest to grade (temperature control of electrode tip); temporary lesions can also be produced prior to causing permanent damage to brain
b) laser heat lesions
c) mechanical lesions (with small wire loop)
d) freeze lesions (cryolesions using liquid $N_2$)
e) balloon lesions (to percuss surrounding brain on inflation)
f) chemical lesions.

Augmentative methods – chronic brain stimulation, cell or tissue transplants, gene transfer.

# IMAGING REQUIREMENTS

Following image types are supported by current software:
• CT, CTA
• MR, MRA
• fMRI, DTI
• PET

"Stealth protocol":

1. 1-3 mm slice thickness
2. Volumetric (3D) scan – contiguous slices (e.g. T1 MPRAGE, CUBE FLAIR)
3. "Zero gantry" – zero tilt – not a requirement for modern navigation software
4. Request not to "cut" the nose and top of head

*Patient with suspected tumor on plain hCT – order diagnostic+Stealth MRI – will save time and trouble!*

Obtain CD from radiology and upload to the navigation station the night before surgery:

1) correct patient
2) correct study

# TARGET LOCALIZATION

- see p. Op360 >>

A. **Direct** - target visually chosen from scan
B. **Indirect** - based upon position of AC-PC

# TRAJECTORY PLANNING

- see p. Op360 >>

# FRAME-BASED STEREOTAXIS

- uses stereotactic frame rigidly attached to skull.

- most commonly used stereotactic frames:
  1) Brown-Roberts-Wells
  2) Cosman-Roberts-Wells
  3) Leksell Model G
  4) Radionics
  5) Talairach
- frame is applied directly to skull (under local anesthesia) by four threaded pins that penetrate only outer table of skull → LOCALIZING BOX is attached to frame → imaging to align brain, lesion, and stereotactic frame → TRAJECTORY PLANNING* → stereotactic arc is mounted on frame → biopsy.
  *see below >>
- frame is applied parallel to orbito-meatal line (approximately parallel to anterior commissure-posterior commissure (AC-PC) line).

Coordinates
Leksell frame (0 ÷ 200)
0 – is above, posterior, on right side
Head center is 100/100/100

LOCALIZING BOX is most accurate method of localization; it is scanner-independent and computer-assisted;

– localizing box with three sets of vertical and diagonal fiducial rods in N configuration is attached to base ring → scanning.

CT-compatible localizer (*left*) and MRI-compatible localizer (*right*):

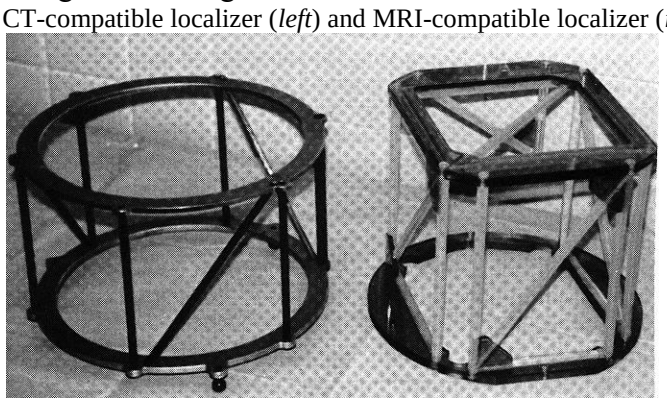

Source of picture: Marshall B. Allen, Ross H. Miller "Essentials of Neurosurgery: a guide to clinical practice", 1995; McGraw-Hill, Inc.; ISBN-13: 978-0070011168 >>

– in resulting image, rods are seen as dots.

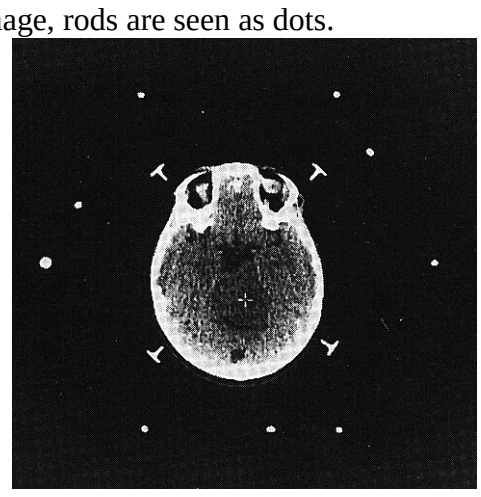

Source of picture: Marshall B. Allen, Ross H. Miller "Essentials of Neurosurgery: a guide to clinical practice", 1995; McGraw-Hill, Inc.; ISBN-13: 978-0070011168 >>

– *z* coordinate is obtained by determining position of each diagonal rod image in relation to its adjacent vertical rods; three such sets of vertical and diagonal rods determine three points in stereotactic space and define plane of target point.

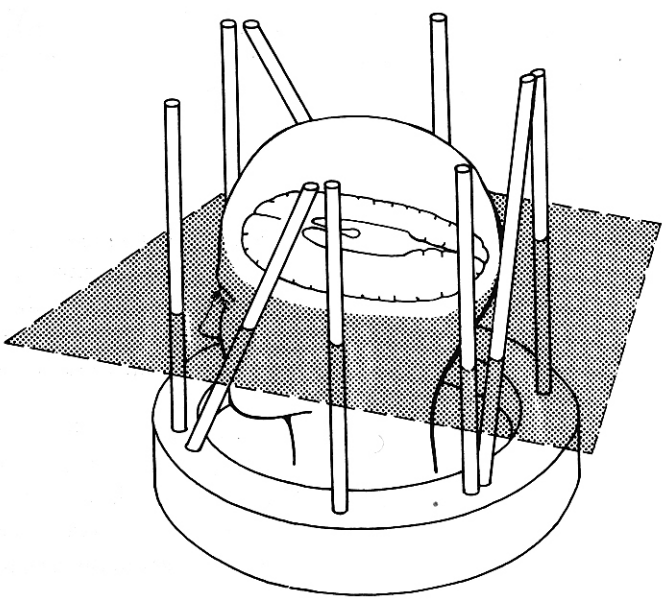

Source of picture: Marshall B. Allen, Ross H. Miller "Essentials of Neurosurgery: a guide to clinical practice", 1995; McGraw-Hill, Inc.; ISBN-13: 978-0070011168 >>

Thermal paper printout of x, y data for nine fiducial localizer rods and target. 3-dimensional target data are printed out at sheet bottom:

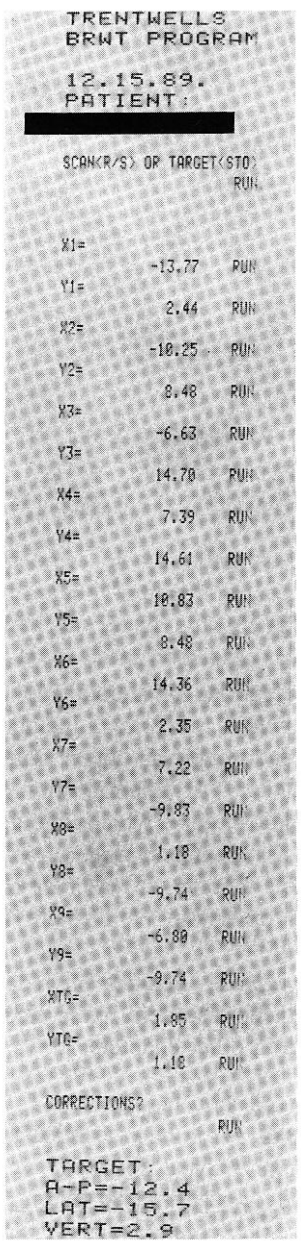

TRENTWELLS
BRWT PROGRAM

12.15.89.
PATIENT:
[redacted]

SCAN(R/S) OR TARGET(STO)
RUN

X1=
Y1= -13.77 RUN
X2= 2.44 RUN
Y2= -10.25 RUN
X3= 8.48 RUN
Y3= -6.63 RUN
X4= 14.70 RUN
Y4= 7.39 RUN
X5= 14.61 RUN
Y5= 10.83 RUN
X6= 8.48 RUN
Y6= 14.36 RUN
X7= 2.35 RUN
Y7= 7.22 RUN
X8= -9.83 RUN
Y8= 1.18 RUN
X9= -9.74 RUN
Y9= -6.80 RUN
XTG= -9.74 RUN
YTG= 1.85 RUN
1.18 RUN

CORRECTIONS?
RUN

TARGET:
A-P=-12.4
LAT=-15.7
VERT=2.9

– *x, y* coordinates of each of nine rods are entered into computer, which calculates distance from each of three diagonal rods to base ring, based on proportionate distance of each diagonal rod from its associated vertical rods in that plane; these three points define target plane relative to base ring, and from this 3D coordinates of target are calculated.

N.B. coordinates are referable to stereotactic base ring.

– lateral (*x*) measurements are denoted "left -," "right +"; AP (*y*) measurements are denoted "anterior +" or "posterior -"; vertical (*z*) measurements are denoted "superior +" or "inferior -".

– because of variability of patient positioning in stereotactic instrument, isocenter of three orthogonal planes of stereotactic space will rarely superimpose upon intersection of corresponding intracranial planes as depicted in human stereotactic brain atlases.

## STEREOTACTIC FRAME TYPES

**TARGET-CENTERING ARC-RADIUS** stereotactic instruments (Todd-Wells instrument, Kelly instrument)

- patient's head is fixed in base ring that is separate from but attached to same platform as aiming arc.
- arc rotates around horizontal axis, and probe holder may be moved to any position along arc.
- trunnions on which arc rotates and arc itself have angular calibrations so that any procedure can be performed using *entry-point* or *angles-of-entry* technique. *see below >>*
- focal point of arc remains fixed in 3-dimensional stereotactic space - it is patient's head (with its intracranial target) that is moved in any of three orthogonal planes to focal point of instrument.
- Vernier scales calibrated in millimeters allow accurate measurement of head movement in each of three planes (radius of the arc system as well as its focal point remain fixed - therefore, target distance from arc is always known, regardless of where twist drill hole entry point is placed).

TODD-WELLS stereotactic instrument - skull is fixated in base ring (*large white arrow*) which can be moved along any of three rectilinear directions; arc (*small white arrow*) can rotate on trunnions (*large black arrow*), but its base (marked with *vertical white labels*) does not move; guide block (*small black arrow*), through which probe passes, can be moved to any point along arc:

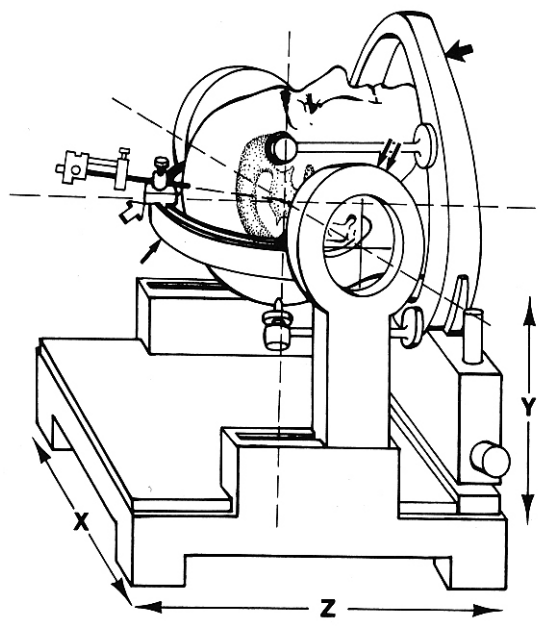


Source of picture: Marshall B. Allen, Ross H. Miller "Essentials of Neurosurgery: a guide to clinical practice", 1995; McGraw-Hill, Inc.; ISBN-13: 978-0070011168 >>

**ARC-CENTERING ARC-RADIUS** stereotactic instruments (Cosman-Roberts-Wells [CRW] instrument, Leksell apparatus)

- arc, which is fixed to base ring on patient's head, is moved in order to bring its focal point to target.
- *entry point* or *angles-of-entry* technique may be used. *see below* >>

COSMAN-ROBERTS-WELLS [CRW] instrument - base plate (*large white arrow*) attaches to base ring; arc (*small white arrow*) can be moved in AP direction along grooves in base plate and superior-inferior along vertical bars (*small double white arrows*); arc moves laterally along U bar (*large black arrow*), which is attached to trunnions; arc rotates on trunnions; guide block (*small black arrow*) can be moved to any position along arc:

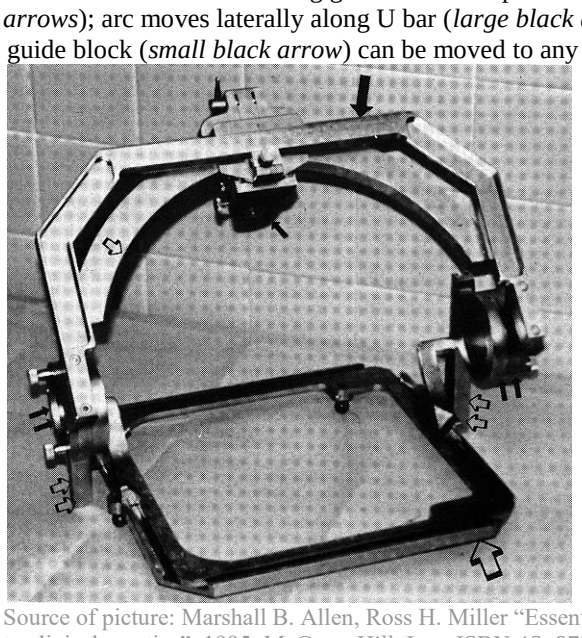

Source of picture: Marshall B. Allen, Ross H. Miller "Essentials of Neurosurgery: a guide to clinical practice", 1995; McGraw-Hill, Inc.; ISBN-13: 978-0070011168 >>

## ROBOTICS

- replacing aiming device or arc system with robotic arm.

- instead of transferring 3D stereotactic target coordinates to arc system, computer calculates these coordinates and transfers them to robotic arm.
- special computer software is used to translate target and entry-point data into angular settings for each of moving joints of robotic arm, and it also programs depth of probe penetration.
- each of joints of robotic arm contains *servomotor*; servomotor houses optical incremental encoder, which provides position and velocity feedback to robot servosystem - position of probe tip can be displayed relative to lesion on operating room computer monitor in real time.
- robotic arm is mounted to stereotactic base ring (fixed to patient's head - serves as reference base plane for system, as in standard stereotactic systems).
- custom-designed probe holder is attached to robotic arm and allows for intraoperative fine adjustment of probe position.

# FRAMELESS STEREOTAXIS

- rendering of scans (CT / MRI) into 3D images → rendered view of patient is aligned with actual patient using 3D digitizer, once patient is fixed in constant orientation in operating room.

- digitization can be performed using either ***fiducial marks*** (skin staples, pins attached to skull) or ***scalp-face surface*** - computer aligns actual patient (as digitized) with computer representation obtained from radiologic images.
- digitization can be performed by:
  a) mechanical device (such as sensor arm similar to that used in robotics)
  b) line-of-sight device (such as video camera or sound waves).
- ***brain warping*** may occur (e.g. following opening of skull, CSF leakage, partial tumor excision) → affected accuracy of device; H: brain updating (such as 3D ultrasound).
  N.B. without rigidly attached frame, surgeon no longer has to deal with physical obstruction from frame (e.g. turning craniotomy flap), but there may be *sacrifice in accuracy* - biopsy of **small tumors**, lesions for **movement disorder** still require stability and accuracy of frame!
- frameless stereotaxis in DBS – see p. Op360 >>

## FIDUCIALS

**Fiducial** (Latin "fiducia" – trust) - point of reference that can be ***visualized on imaging*** and ***identified on the patient*** by the surgeon and/or software package

- **Frame-based stereotaxy**: Fiducials are bars built into cage or box that sits on frame during imaging
- **Frameless stereotaxy**: Fiducials are reference markers (stickers, bone screws) which are fixed directly to the patient prior to imaging

### STICKER SKIN FIDUCIALS

Timing
Fiducials tend to fall off – apply them temporally as close to the MRI as possible. And schedule MRI as close to surgery as radiology agrees.

Location:

- first know where tumor is and think about position during surgery (supine, prone, decubitus) – fiducials must be accessible for registration after patient is positioned.
- apply ***most densely above tumor*** (i.e. center of fiducial configuration close to the region of interest) - error increases as the distance of the target from the fiducial centroid increases:

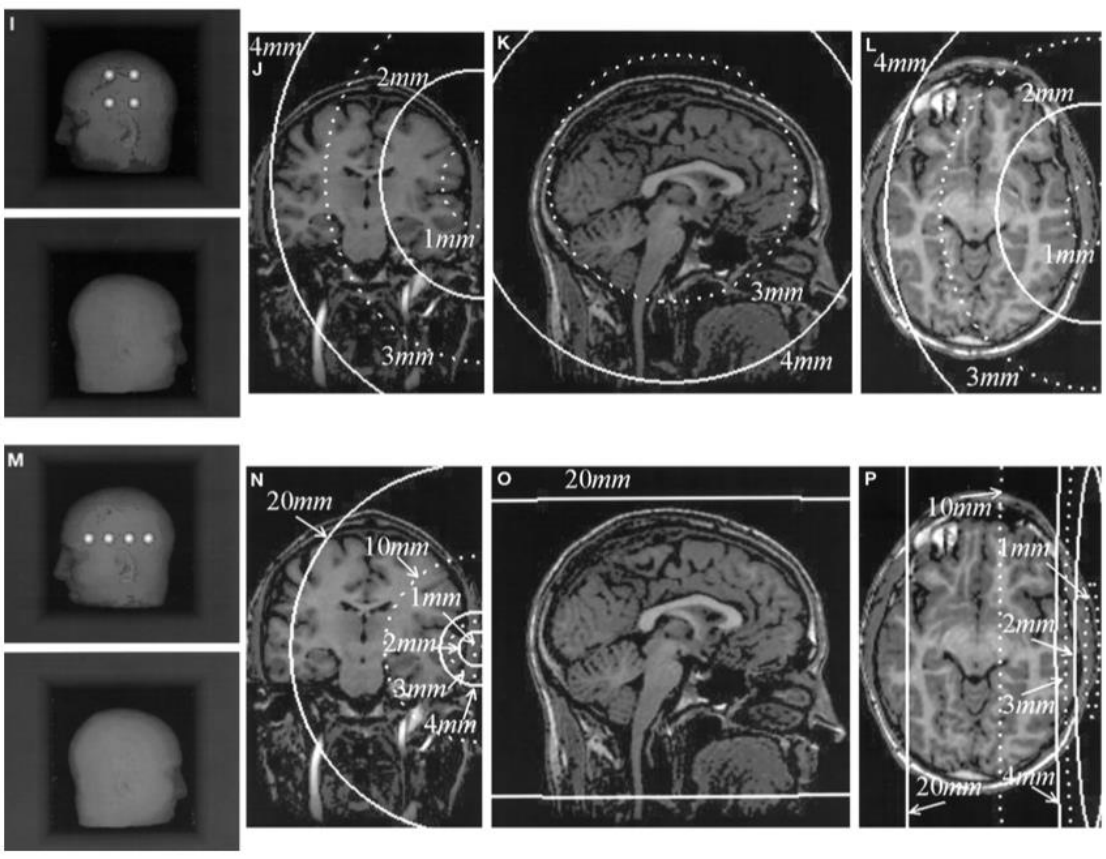


- it is essential for the ***fiducials to define the sphere of the head*** - spread out fiducials across patient's head (error increases as configuration of fiducials becomes smaller)
- avoid linear fiducial configurations
- spread markers asymmetrically
- apply on nonmovable skin
- avoid distorted scalp (thus, avoid occipital region)

Number

- use as many fiducials as reasonably possible (minimum 3)
- accuracy of targeting is increased by number of fiducials

| Fiducials | | Imaging | Mean | SD | Median | 95th percentile | Maximum |
|---|---|---|---|---|---|---|---|
| n | attachment pattern | | | | | | |
| 4 | generalized | MR | 2.45 | 0.94 | 2.3 | 3.9 | 6.15 |
| 6 | generalized | MR | 2.40 | 0.99 | 2.3 | 4.25 | 5.15 |
| 8 | generalized | MR | 1.93 | 0.74 | 1.78 | 3.1 | 3.95 |
| 10 | generalized | MR | 1.98 | 0.68 | 1.9 | 3.1 | 3.85 |

Steinmeier et al, 2000

Technique:

- shave hair well!
- clean scalp skin with alcohol
- place fiducial
- mark scalp skin at fiducial site - circle with permanent skin marker + mark the center dot
- (unapproved at VCU, worked well at VA): Dermabond those "lifesavers" to the scalp (so confused patient does not eat them all overnight).

## BONE FIDUCIALS, SCREW DRIVERS

Rigidly attached to skull bone – highest accuracy; can be used for navigation in awake patients (vs. Mayfield skull clamp).

**Medtronic Unibody Bone Fiducials** (models FM-4007 [7 mm], FM-4010 [10 mm], and FM-4013 [13 mm]) – made of titanium, intended for use as fixed reference points for CT imaging.

- may cover fiducials with plastic caps (helps to protect fiducial during transportation to CT, helps to find the fiducial on 3D imaging; some say it also improves CT contrast).
- 1.6 mm screw driver:

Stryker battery-powered screwdriver QuikDrive™ mini (catalog #62-50101)


Stryker battery-powered screwdriver VariSpeed (catalog # 62-50200)


Screwdriver blades: #62-15001 – it is 1.7 mm
#62-00537 – size?

OsteoMed hand-held screwdriver (#220-0019 and the blade #220-0061).

## PATIENT REGISTRATION

Make sure reference frame (Stealth) / tracker (Stryker) is rigidly attached to skull clamp:

## MANUAL REGISTRATION

1. **Point registration**:
   a. **Touch-n-Go** (Stealth) - centers of fiducial markers
   b. **Point Merge** (Stealth) - anatomical landmarks (can be used as rescue if during surgery registration is lost):
      – teeth ("bone fiducials")
      – nose tip
      – lateral canthus
      – nasion
      – tragus (mark slightly medial on scan as operator tend to push inwards with probe)
      – intersection points of bone sutures
      – old bur holes

2. **Surface matching (tracing)**
   - avoid one plane / one sphere
   - cover prominent areas such as orbit and nose
   - do not depress the skin when tracing

## AUTOMATIC REGISTRATION

1. **Mask registration** (Stryker) - automatic touchless registration - enabling pinless procedures (if mask can be left on and visible to camera through transparent drapes)

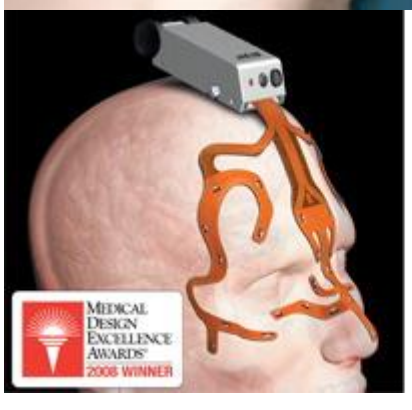


2. **O-arm registration** – very high accuracy; ideal for patient in prone position (otherwise, difficult to register by any other method)

   In Stealth:
   - choose special module from the beginning ("O-arm tumor resection" or "O-arm biopsy").
   - use radiolucent Mayfield (conventional Mayfield is also acceptable but has bulky lower part); attach Stealth "dogbone" from outside (and Mayfield bed attachment from inside) of Mayfield.
   - O-arm gantry cannot tilt more than 20 degrees.

- go to "Acquire scans" step → scan mode: high-resolution, medium-energy (no need for enhanced scan) → wait until scan is transferred → click "Stealth Merge" → select (on left side) the new scan to add to the right window (of scans to be merged)* → click "Merge"

  *do not make it as a new reference scan (leave old reference scan in place)

## INSTRUMENT HOLDING ARMS

Medtronic "Vertek"
BrainLab "VarioGuide"

## NAVIGATION ACCURACY

Acceptable ≤ 0.3 mm (in DBS ≤ 0.2 mm)

Clinical application accuracy (comparing seven registration methods):

**TABLE 2. Global application accuracy[a]**

| Parameter | Measurement | Point-based registrations | | | | Surface-based registrations | | |
|---|---|---|---|---|---|---|---|---|
| | | Anatomic landmarks | Five adhesive fiducials | Ten adhesive fiducials | Four cranial-implanted fiducials | 45 points: convexity | 45 points: relief and convexity | 100 points: relief and convexity |
| Calculated accuracy | Mean | 2.4 | 1.9 | 1.8 | 0.7 | 1.0 | 1.0 | 1.1 |
| | SD | 0.9 | 0.5 | 0.4 | 0.2 | 0.3 | 0.3 | 0.2 |
| Target localization error: global | Mean | 4.8 | 3.7 | 3.7 | 1.7 | 4.1 | 4.3 | 4.2 |
| | SD | 1.9 | 1.8 | 1.7 | 0.7 | 1.5 | 1.7 | 1.6 |

[a] SD, standard deviation.

## SOURCES OF ERROR

Imaging data set resolution, e.g., slice thickness

| CT Slice Thickness (mm) | Measurement | BRW (mm) | CRW (mm) | COMPASS (mm) | Leksell (mm) |
|---|---|---|---|---|---|
| 1 | Mean ± 3 $SE_M$ | 1.9 ± 0.10 | 1.8 ± 0.11 | 1.2 ± 0.06 | 1.7 ± 0.10 |
| | 99% CI for the mean | 1.80 to 2.00 | 1.69 to 1.91 | 1.04 to 1.26 | 1.60 to 1.80 |
| 1 canted | Mean ± 3 $SE_M$ | 2.5 ± 0.11 | 2.2 ± 0.11 | 2.1 ± 0.10 | N/A |
| | 99% CI for the mean | 2.39 to 2.61 | 2.09 to 2.31 | 2.00 to 2.20 | N/A |
| 4 | Mean ± 3 $SE_M$ | 2.7 ± 0.13 | 2.6 ± 0.15 | 2.5 ± 0.12 | 2.6 ± 0.14 |
| | 99% CI for the mean | 2.57 to 2.83 | 2.45 to 2.75 | 2.38 to 2.62 | 2.46 to 2.74 |
| 8 | Mean ± 3 $SE_M$ | 6.6 ± 0.31 | 6.6 ± 0.30 | 5.1 ± 0.23 | 5.4 ± 0.24 |
| | 99% CI for the mean | 6.29 to 6.91 | 6.30 to 6.90 | 4.87 to 5.33 | 5.16 to 5.64 |

[a] The large numbers of measurements yielded small standard errors of the means and a resultant high confidence in these experimentally derived means as being representative of the true means of application accuracy for these stereotactic frame systems. $SE_M$, standard error of the mean; N/A, not available; CT, computed tomography; BRW, Brown-Roberts-Wells; CRW, Cosman-Roberts-Wells; CI, confidence interval.

Maciunas et al, 1994

Imaging errors due to distortion

MRI Image Distortion - magnetic field inhomogeneities and non-linear magnetic field gradients

- often worst in *coronal sections*.

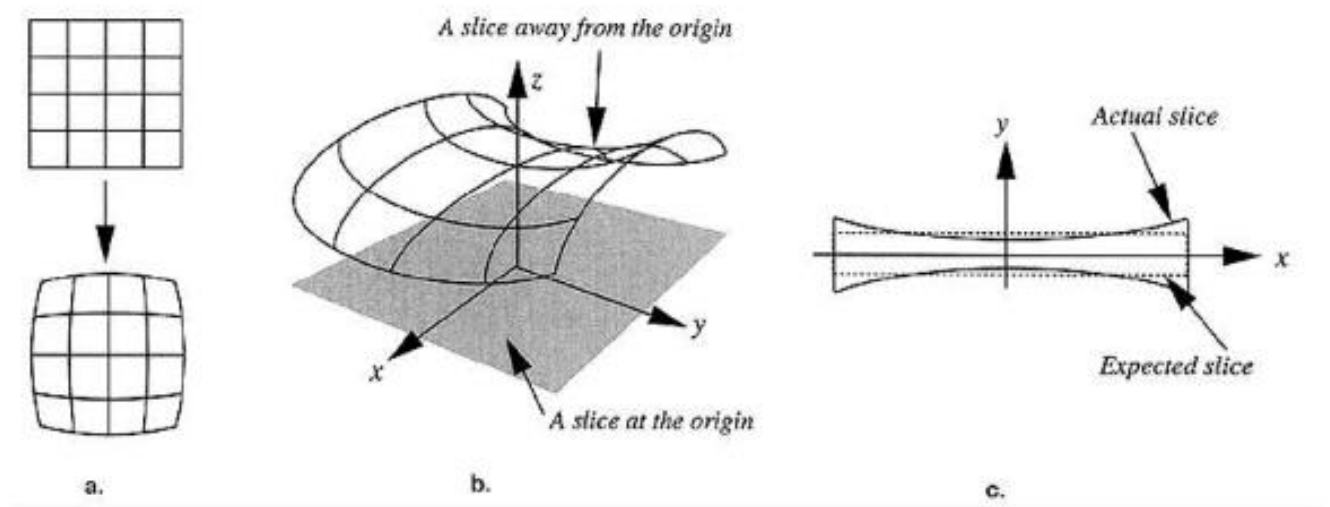


CT not subject to these distortions; CT/MRI fusion may minimize effects of distortion

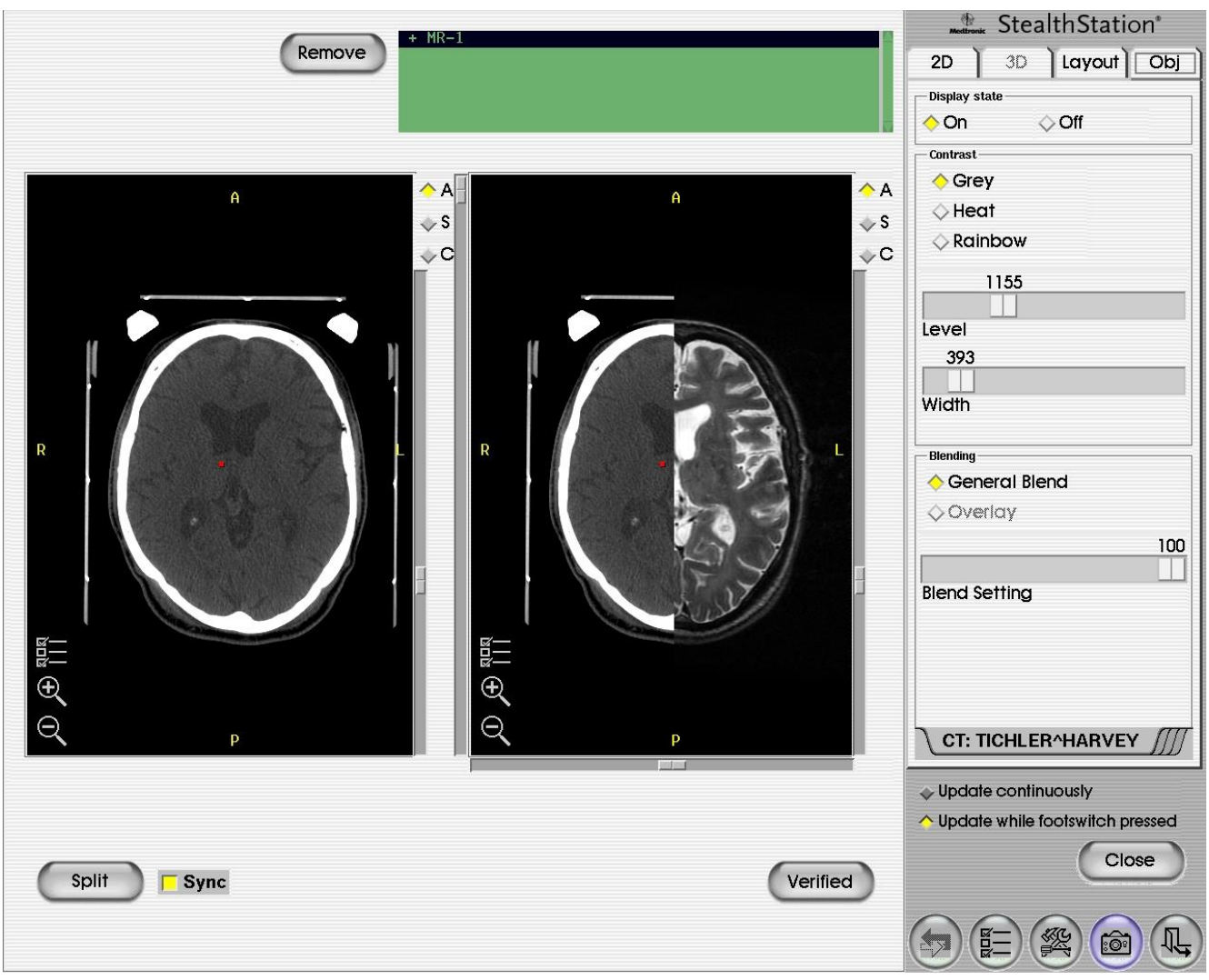


Fiducial displacement

Registration process (image–OR space)
Be very careful to ensure proper image R-L orientation (opposite of conventional CT/MRI orientation)

Bent handheld probe

- **navigation tool VERIFICATION** – system verifes that instrument is not bent.

Target shift during resective surgery.

Prolonged time

- after registration there is *ongoing silent loss of neuronavigation accuracy*; major factors:
  1) draping
  2) attachment of skin-retractors
  3) duration of surgery (target registration error was 1.3 mm after 30 minutes and increased up to 4.4 mm after 5.5 hours of surgery).

# MEDTRONIC STEALTH

Stealth S7

Stealth TREON


**Vertek** – flexible arm that attaches to Mayfield frame.

Select CD type to upload:
**Structured DICOM** – first choice; if struggles → choose **Unstructured DICOM** – always works but takes longer (system checks all possible modalities).

## SYNERGY CRANIAL

At the login screen, click **Cranial**
Select **Standard Profile** or select a primary surgeon.

- you may add or customize surgeon profiles by clicking **[Add or Remove Surgeon]**.
- surgeon profiles allow you to save surgeon-specific preferences (instruments, navigation options, view settings).

May navigate between several steps faster by clicking on it:


May use: 


## IMAGE management

One of three standard methods to import a new exam:

a) CD/DVD-ROM
b) USB
c) DICOM - push exam across DICOM network (exam automatically appears in the list of imported exams) or click **[DICOM Q/R])**

Use volumetric (3D) exam for registration (most commonly T1)

### IMPORTING STEALTHVIZ OBJECTS

1. Select Patient task, Exams column: select exam with 3D Objects → **[Exam Details]** → Modality drop-down list → select "Object" (as new image type) - this automatically sets the colormap to Rainbow to match StealthViz colors and makes black background areas transparent.
2. **[StealthMerge]** → **[Start Merge]**; because the StealthViz exams were already merged in StealthViz, click **[Stop AutoMerge]** and **[Reset Merge].**
3. Click the Pre-Merged Exams tab.
4. Verify the merge accuracy by clicking Blend or Split-window:
   a. If merge is accurate, click **[Verify Merge].**

b. If merge is not aligned correctly, click [Cancel] to cancel merge and proceed to plan and navigate on Hybrid exam.

Alternatively, go back to StealthViz, recheck your work there (e.g., make sure Primary exam is one that was used as Reference for coregistraton step), re-export exams, re-import them into Synergy Cranial, and use [StealthMerge] again.

5. When you have verified all exams, click **[Done].**
6. In PLAN task: click **[Edit 3D Model]** or **[Build 3D Model]** → at the bottom left, select **[Import Models]** → select your StealthViz Objects → **[Import Models].**

## REFERENCE SYSTEMS

### OPTICAL

A. **Mayfield frame + small passive cranial frame** ("blue butterfly")

B. **Neuro FrameLock** – skull mounted (requires separate incision) – for awake craniotomies to avoid pinning

### AxiEM

- do not need pinning (good for awake procedures); at VCU currently available only on Stealth # 2 machine.

A. **Skin "sticker"** – use Mastisol then tape to skin; use nonmovable skin regions.

B. **AxiEM Skull Mounted Tumor Resection kit** – skull mounted (requires separate incision)

- place Mobile Emitter in the special version of Vertek® Articulating Arm
- no metal objects in the navigation field! (if metallic distortion causes excessive error, navigation will be disabled)
- shunt passer has sensors at the stylet tip – uses real time navigation!

## PLANNING

- when tracing tumor projection on the scalp (to plan incision), use trajectory views (vs. anatomic orthogonal) – give the best view of tumor!!!

## STEALTHVIZ

- see >>

## FRAME LINK

- see p. Op360 >>

# STRYKER

Manuals
Stryker - iNtellect Cranial navigation >>
Stryker - CranialMap >>

iNtellect Cranial module


Dr. Graham uses mask registration before pinning in Mayfield; before pinning also register "rescue points"; after pinning, attach tracking device on arm on Mayfield, "transfer registration", and recheck "rescue points"; remove mask.

### TRACKING DEVICE

(analog to Medtronic SureTrak)


stryker
6000-999-005
7-15mm


stryker

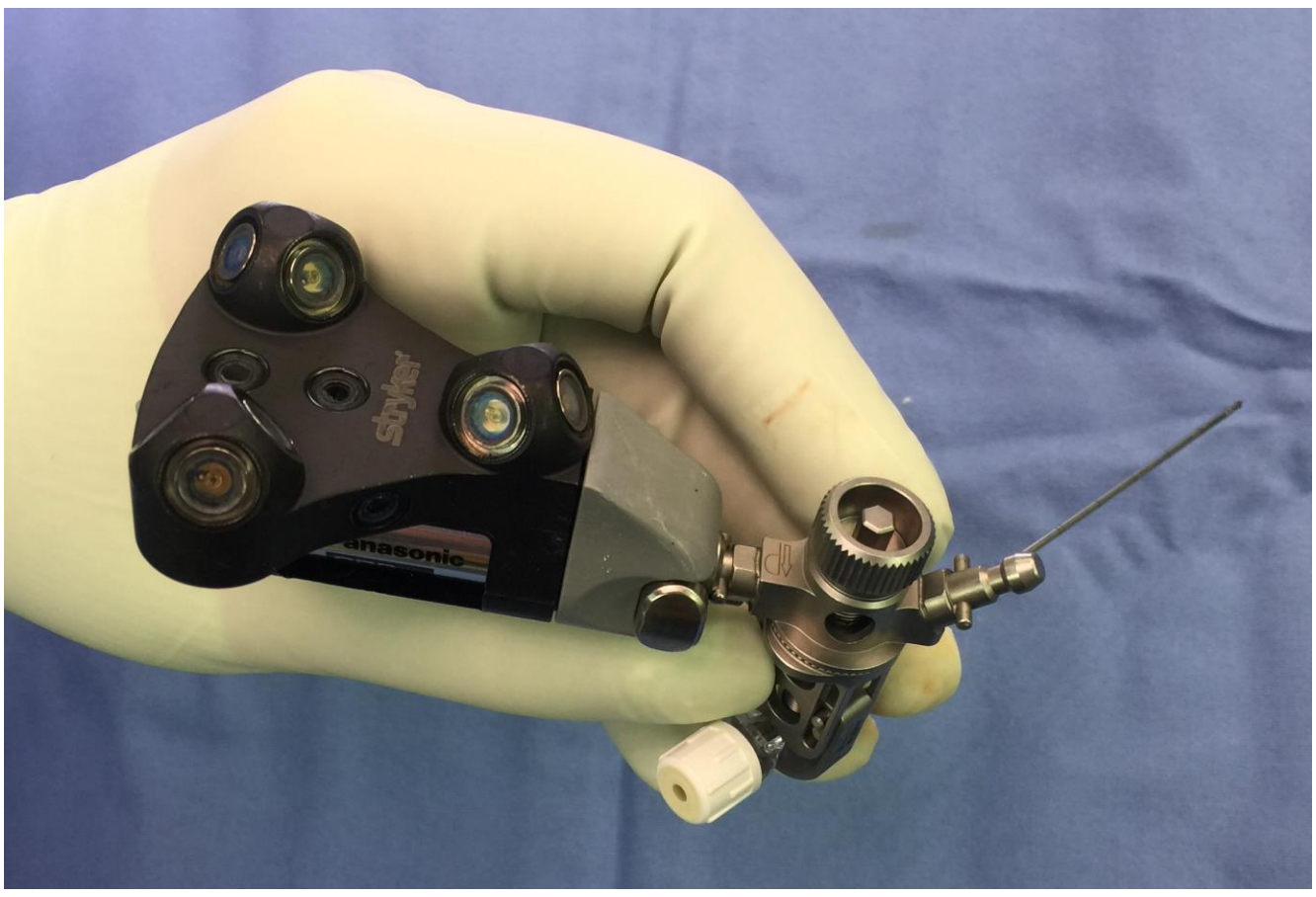


Calibration "pineapple"